SOV UPDATE: VENDOR

Process Description

Provides for submission, review, and approval of the SOV for Construction or Professional Service contracts. The SOV submitted an approved becomes the basis for pay requests.

Roles That can Start the Process

Architect/ Engineer (AE), Construction Manager at Risk (CMR), Criteria AE (CAE), Design Builder (DB), General Contractor (GC), OSU Contract Administrator (CA), OSU Project Manager (PM)

Process Participants

Architect/ Engineer (AE), Construction Manager at Risk (CMR), Criteria AE (CAE), Design Builder (DB), General Contractor (GC), OSU Contract Administrator (CA), OSU Project Manager (PM)

Workflow Diagram

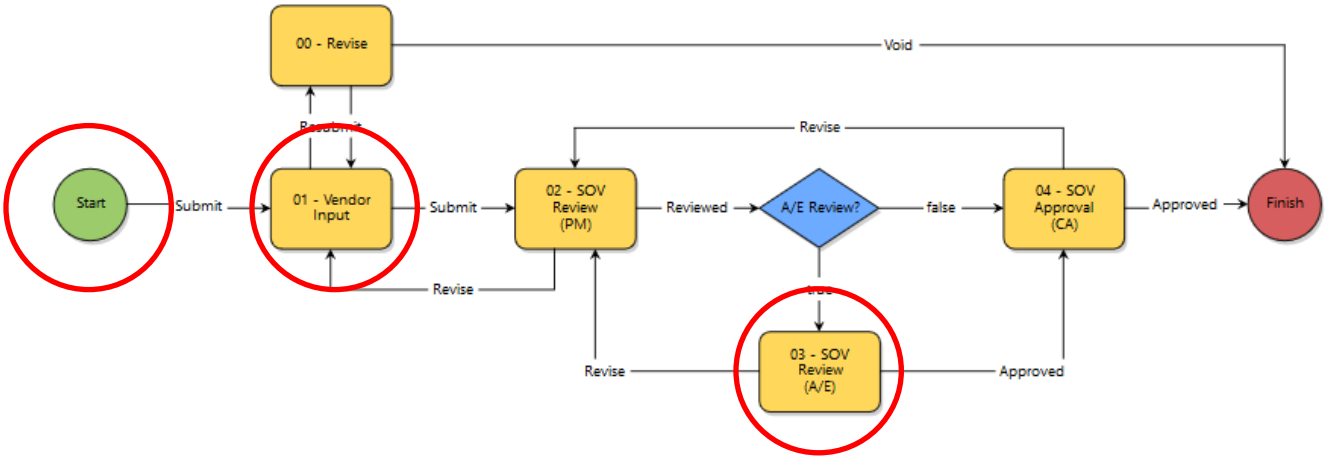

Initiation of Process

- The CA initiates the process for the initial SOV when the contract is executed. This process must be initiated to approve any changes to the SOV prior to invoicing for them on the pay app.

1. Open the Schedule of Values Update (SOV) process. The ***Schedule of Values Update*** screen displays
2. Indicate of AE Review is required
    - Note: This process is used for Professional Service and Construction pay apps. If the SOV is for a professional service contract, select ***No.***
    - Note: Be sure to adhere to all embedded help text

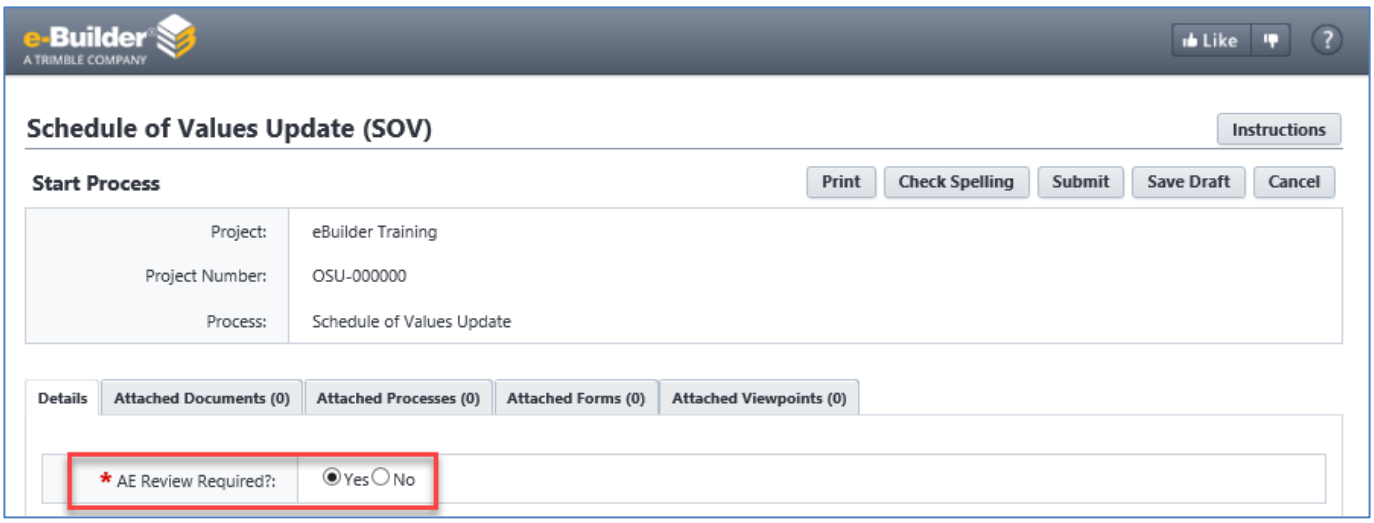

3. Enter required ***Commitment Change Details***
    - Select a ***Commitment, Date of Change***, and ***Reason Code*** ("SOV Update (Original)" or "Amendment (Changes)"
    - Follow the on-screen instructions
4. Click the ***Submit*** button

Vendor Input

1. Open the process. The ***Schedule of Values Update (SOV) – 1*** screen diplays
2. Attach EDGE documentation for items not previously submitted (ex. additional work, change in subcontractors, etc)

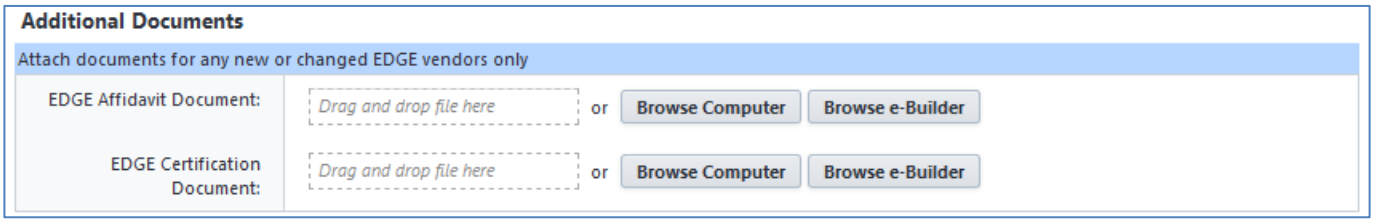

3. Follow the on-screen instructions to complete the SOV

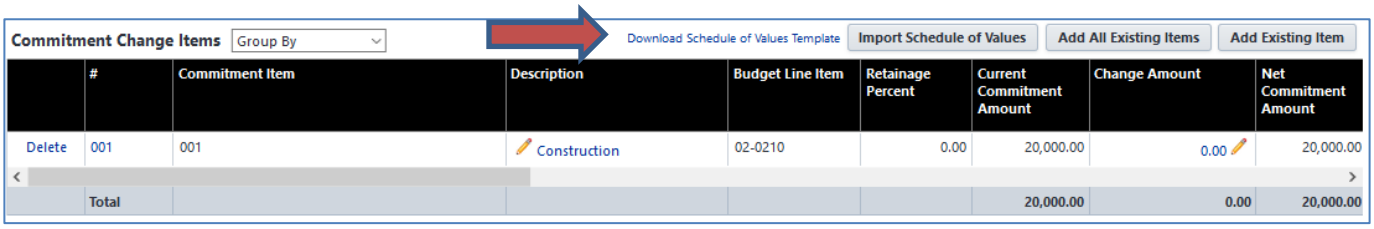

1. Click ***Download Schedule of Values Template***
2. Click on the cell in the ***Account Code*** column to select a code- copy account code (column A) and funding rule to all new line items
3. Enter a ***Description*** of the item (will autopopulate based on selected CSI code, or you can make your own)
4. Current SOV amount ($0 for new lines)
5. Change amount (for this line)
6. ***Location*** (ex: if you are dividing the SOV by Building or floors)

7. Select ***CSI Division*** and ***CSI Detail L2 and L4***
    - Note: Professional Service SOVs use CSI divison “99”
8. Select a ***Type*** – Labor or Materials (the Retainage column will automatically populate based on the selection)
9. ***EDGE Vendor***? – Indicate if the line will be performed by an EDGE vendor
    - **Note: If you have one labor item and only a portion will be supplied by an EDGE Vendor, you must split the line accordingly. If EDGE is claimed on a line, the entire amount of that line must be performed by the EDGE vendor indicated.**
10. ***EDGE Vendor Name*** – Enter the Vendor Name
11. ***EDGE Amount*** – Enter the EDGE amount (should agree with line amount)

Additional Process Step

SOV Review (PM) – Performed by OSU

SOV Review AE

1. Open the process
2. Review the SOV
3. From the dropdown box select ***Approve*** or ***Revise.*** If Revise is selected the process is send back to the contractor.
4. Click the ***Take Action*** button

Additional Process Step

Approval (CA) – Performed by OSU

Finish

The process is complete. The vendor may now submit a pay app.